Pb Process Capable | RoHS Compliant 2011/65/EU | Compliant Halogen Free

| REV. | ECN NO. | DESCRIPTION | DATE | DESIGN |
|---|---|---|---|---|
| | | | | |
| | | | | |

| General tolerances(mm) | | | | | | | | | | | | | | |
|---|---|---|---|---|---|---|---|---|---|---|---|---|---|---|
| 0 ~ 3 | >3 ~ 6 | >6 ~ 10 | >10 ~ 18 | >18 ~ 30 | >30 ~ 50 | >50 ~ 80 | >80 ~ 120 | >120 ~ 180 | >180 ~ 250 | >250 ~ 315 | >315 ~ 400 | >400 ~ 500 | >500 | 0.1/10 |
| ±0.12 | ±0.18 | ±0.22 | ±0.26 | ±0.31 | ±0.37 | ±0.57 | ±0.80 | ±0.93 | ±1.05 | ±1.15 | ±1.60 | ±2.20 | ±2.50 | ±2° |

| Product model | PIN | A | B |
|---|---|---|---|
| A381K-2P1G36 | 2 | 8.41 | 3.81 |
| A381K-3P1G36 | 3 | 12.22 | 7.62 |
| A381K-4P1G36 | 4 | 16.03 | 11.43 |
| A381K-5P1G36 | 5 | 19.84 | 15.24 |
| A381K-6P1G36 | 6 | 23.65 | 19.05 |
| A381K-7P1G36 | 7 | 27.46 | 22.86 |
| ..... | .... | ..... | .... |
| A381K-24P1G36 | 24 | 3.81xN+0.79 | 3.81x(N-1) |

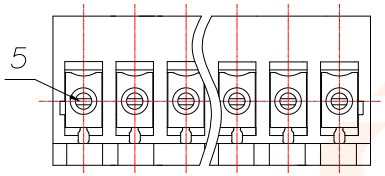


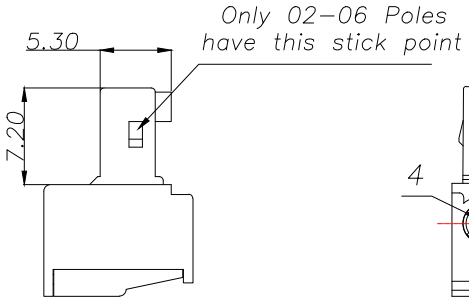


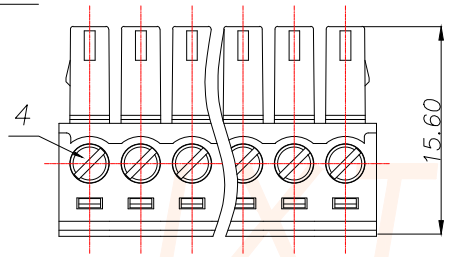


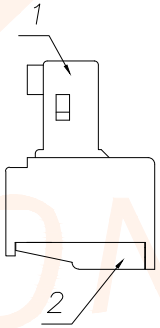


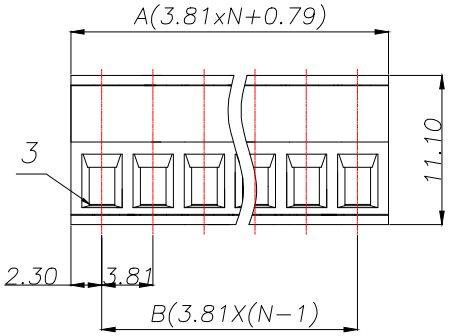


| UL Standard | B | C | D |
|---|---|---|---|
| Rated Voltage(V)/Current(A) | 300/8 | / | 300/8 |
| IEC Standard | | | |
| Overvoltage Category/Pollution Degree | II/2 | | |
| Rated Voltage(V)/Current(A) | 250/7 | | |
| Rate Impulse Voltage(KV) | 2.5 | | |
| Torque Tightening(N·m/Lb.in) | M2, 0.2/1.77 | | |
| Wire Range(rigid and flexible)(mm²/AWG) | 0.5~1.5/28~16 | | |
| Pitch(mm)/Poles | 3.81/N=02~24P | | |
| Stripping length(mm) | 6-7 | | |
| Operating temperature(°C) | -40C°~+105C° | | |
| Conform to RoHS | Yes | | |

| ITEM | NAME OF PART | MATERIAL | NOTES |
|---|---|---|---|
| 5 | Clamp | Copper Alloy | Sn Plated |
| 4 | Screw | Steel | M2/Zn Plated |
| 3 | Cage | Copper Alloy | M2/Ni Plated |
| 2 | Cover | PA66 | UL94V-0 |
| 1 | Housing | PA66 | UL94V-0 |

| TOLERANCE | | 深圳聚兴泰电子科技有限公司 Shenzhen Juxingtai Electronic Technology Co., Ltd | |
|---|---|---|---|
| | | PART NO. A381K-NP1G36 | TITLE: Socket-type terminal |
| UNITS | mm | DESIGN: Ethan | MANUFACTURE DWG |
| MATERILA | — — — | CHED: Olvia | SCALE N:A / SHEET 1/1 |
| FINISH | — — — | APPD: Ava | |

JXTCONN